SuzyQable Case-Closed Debug Cable

SCH: 951-00273-01
ASSY:951-00273-01
PCB: 951-00273-01

TABLE OF CONTENTS

SHEET NO.	SHEET NAME
1	TABLE OF CONTENTS
2	SUZYQABLE

THIS WORK IS LICENSED UNDER A CREATIVE COMMONS ATTRIBUTION 4.0 BY LICENSE.

PAGE TITLE:	TABLE OF CONTENTS		
DESIGN: suzyqable	DOC NUMBER: 951-00273-01	REV: 1.00	
MODIFIED: Mon Jun 4 23:34:13 2018		PAGE: 1 OF 2 FLAT: 1 OF 2	

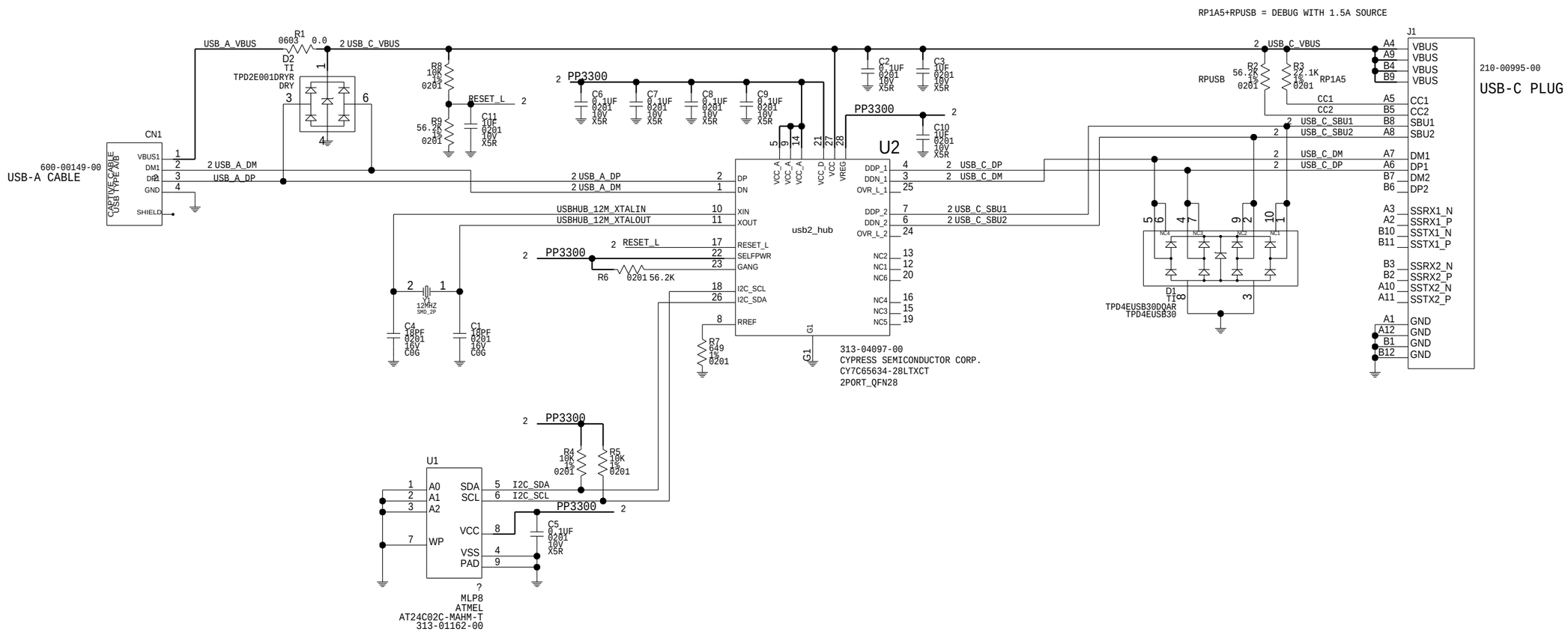

THIS WORK IS LICENSED UNDER A CREATIVE COMMONS ATTRIBUTION 4.0 BY LICENSE.

PAGE TITLE:	SUZYQABLE		
DESIGN: suzyqable	DOC NUMBER: 951-00273-01	REV: 1.00	
MODIFIED: Thu Jun 7 13:51:19 2018		PAGE: 2 OF 2 FLAT: 2 OF 2	